AMW004

Data Sheet

Copyright © 2014-2015 ACKme Networks

Disclaimer

While the information provided in this document is believed to be accurate, it is under development and ACKme Networks reserves the right to make changes without further notice to the product described herein to improve reliability, function, or design, and makes no guarantee or warranty concerning the accuracy of said information, nor shall it be responsible for any loss or damage of whatever nature resulting from the use of, or reliance upon, such information. ACKme Networks makes no warranties of any kind, whether express, implied or arising by custom or course of trade or performance, and specifically disclaims the implied warranties of title, non-infringement, merchantability, or fitness for a particular purpose.

No part of this document may be copied, reproduced, stored in a retrieval system, or transmitted, in any form or by any means, electronic, mechanical, photographic, or otherwise, or used as the basis for manufacture or sale of any items without the prior written consent of ACKme Networks.

Trademarks

ACKme Networks and the ACKme Networks logo are trademarks of ACKme Networks. Other trademarks in this document belong to their respective owners.

Copyright © 2014-2015 ACKme Networks.

All rights reserved.

Document Number: ADS-MW004-104R

Release Date: September 10, 2015

Contact

http://ack.me/contact

About this Data Sheet

This document provides information on the AMW004 embedded Wi-Fi networking solution from ACKme Networks. Specifications for the I/O and peripherals are taken from the MCU datasheet. Specifications for the WLAN subsystem were compiled from measured data unless otherwise noted.

Organization

This data sheet is organized into the following sections:

- Features & Applications
- General Description, Section 1
- Block Diagram, Section 2
- Electrical Specifications, Section 3
- WLAN RF Specifications, Section 4
- Pinout and Signal Descriptions, Section 5
- Design Guidelines, Section 6
- Regulatory Certification, Section 7
- Packaging, Handling & Storage, RoHS, Section 8
- Ordering Information, Section 9
- Revision History & Glossary, Section 10
- References, Section 11

AMW004 Datasheet
Embedded Wi-Fi Networking Solution

Features

- Self-contained low-power Wi-Fi networking module with onboard microcontroller and antenna.
- Integrated SPI-serial flash for software upgrades

Wi-Fi

- Broadcom BCM43362 single band 2.4GHz IEEE 802.11b/g/n 1x1 Wi-Fi transceiver
- Includes support for all Wi-Fi security modes including Open, WEP, WPA, and WPA2-PSK

Microprocessor

- ARM 32-bit Cortex™-M4 CPU
- Up to 22 Peripheral DMA controller channels
- Ultra Low Power sleep, wait and backup modes
- 128-bit unique ID

Interfaces*

- A/D converters: 10 channel input, 12-bit resolution, 1Msps with gain control and auto calibration
- D/A converter: 1 channel x 12-bit, 1 Msps
- UART: 2 x 4-wire for host comms & debug
- SPI: 1 x SPI-Master for peripheral comms
- GPIO: Up to 29 GPIOs (overlaid with peripherals)
- PWM: Up to 12 PWM outputs
- Wake-up : 12 External wake inputs for ultra-low power operation
- External Wi-Fi antenna option

**Some interfaces share module pins*

Operational & Radio

- Single operating voltage : 3.3V (typical)
- Operational Temperature Range: -30°C to +85°C
- Size : 1.25” x 0.70” x 0.11” (31.8 x 17.8 x 2.7 mm)
- Weight : 0.07 oz (2 g)
- Current consumption @ 25°C
  - Backup : 1.85 µA, <300 µs wakeup
  - Wait : 28 µA, <100 µs wakeup, RAM retention
  - Wi-Fi Powersave : 0.77 mA
  - UDP receive (1 Mbit/s) : 6.9 mA
  - UDP transmit (1 Mbit/s) : 12.5 mA
  - Active receive (100% duty cycle) : 87.8 mA
  - Active transmit (100% duty cycle) : 348.8 mA
- Maximum RF transmit power
  - 802.11b/g : +18.5 dBm
  - 802.11n : +13.5 dBm
- Minimum Receive sensitivity
  - 802.11b/g : -94 dBm
  - 802.11n : -86 dBm
- Sustained TCP throughput
  - UART : >10 Mbit/s

Applications

- Industrial, M2M and Home Automation
  - Environmental monitoring
  - Energy monitoring
  - Wireless sensing, remote data logging
  - HVAC, power, light, & thermostat control
  - Appliance control
- Security
  - Cameras, Doors/Window monitoring
  - Alarms, Smoke Detectors
  - Door and entry control
- Health & Fitness
  - Fitness Equipment
  - Home health monitoring eg. weight scales
- Consumer
  - Audio, Toys, Robots

Copyright © 2014-2015 ACKme Networks http://ack.me

Contents

1 General Description 1
2 Block Diagram 1
3 Electrical Specifications....2
3.1 Absolute Maximum Ratings 2
3.2 Recommended Operating Conditions 2
3.2.1 DC Operating Conditions 2
3.2.2 Environmental Conditions 2
3.3 Power Consumption 3
3.4 32kHz Crystal 3
4 WLAN RF Specifications 4
4.1 Summary WLAN Specifications 4
4.2 WLAN Receiver Specifications 4
4.3 WLAN Transmitter Specifications 5
5 Pinout and Signal Descriptions 6
5.1 Pinout 6
5.2 Pin Description 6
6 Design Guidelines....9
6.1 Recommended PCB Footprint 9
6.2 Routing Recommendations 9
6.3 Soldering Information....10
6.4 Module Photograph 11
6.5 Antenna Radiation Pattern....11
6.6 External Antennas 12
6.7 Application Examples 12
6.7.1 Power Supply....12
6.7.2 Operation using WiConnect 13
7 Regulatory Certification 14
7.1 United States 14
7.1.1 Labeling and User Information Requirements 14
7.1.2 RF Exposure 15
7.1.3 Approved Antenna Types 15
7.1.4 Further Information....15
7.2 Canada 15
7.2.1 Labeling and User Information Requirements 15
7.2.2 Approved Antenna Types 17
7.2.3 Further Information....17
7.3 Europe 17
7.3.1 Labeling and User Information Requirements 18
7.3.1 External Antenna Requirements 18
7.3.2 Further Information....18
7.4 Australia....19
7.4.1 External Antenna Requirements 19
7.4.2 Further Information....19
7.5 New Zealand....19
7.5.1 External Antenna Requirements 19
7.5.2 Further Information....19
8 Packaging, Handling & Storage, RoHS 20
8.1 Packaging....20
8.2 Handling & Storage....20
8.3 RoHS Directive 20
9 Ordering Information....21
10 Revision History & Glossary 22
10.1 Revision History....22
10.2 Glossary 22
11 References 23

Copyright © 2014-2015 ACKme Networks

1 General Description

The AMW004 module from ACKme Networks combines a microcontroller with a BCM43362 Wi-Fi device and on-board antenna to provide an advanced stand-alone Wi-Fi and networking solution.

An integrated module avoids difficult RF layout and enables designers to rapidly embed Wi-Fi and secure networking functionality into virtually any device.

The ACKme Networks WiConnect serial-to-Wi-Fi application may be used to fast-track module integration into end-products.

With dimensions of just 31.8 mm x 17.8 mm and a wide temperature range, the module is suitable for integration into most embedded applications.

The Wi-Fi device from Broadcom includes an integrated RF transmit power amplifier and provides superior Wi-Fi performance and full compatibility with all 2.4GHz 802.11b/g/n Wi-Fi networks. An external antenna option provides additional performance and flexibility if required.

The microprocessor is based on a high-performance ARM® Cortex™-M4 32-bit RISC core operating at a frequency up to 120 MHz. The MCU incorporates high-speed embedded memory including 1MB Flash memory and 128 kB SRAM, and an extensive range of enhanced I/Os and peripherals.

The AMW004 module connects a large number of MCU pins to capitalize on the extensive MCU I/O and peripheral interfaces. The module supports the following list of interfaces, and provides additional interface combinations by leveraging MCU I/O multiplexing and alternate function capabilities.

- 10 x 12-bit A/D converters
- 1 x 12-bit D/A converters
- 2 x 4-Wire UART interfaces
- 1 x SPI-master interface
- 12 x edge/level sensitive wake inputs

The module may be powered by a single 3.3V power supply. A separate WLAN power supply pin is provided to minimize noise coupling into the WLAN subsystem, and to enable additional control for power sensitive applications.

Power consumption in various states is determined by the power consumption of the microprocessor and BCM43362 Wi-Fi chip. The power supply to the Wi-Fi chip and radio subsystem may be externally knife-switched under software control to achieve minimum power consumption in an ultra-low power backup state.

The microprocessor may be woken from low power states by connecting any of 12 different module pins.

The module incorporates a 32.768 kHz crystal to maintain an accurate real time clock. A 32kHz clock output is available on a dedicated module pin in both active and MCU powerdown modes. The 32 kHz clock output may be used to drive the clock input of other system devices. This avoids the need for an additional crystal thereby minimizing total system cost.

The module has FCC & IC modular approval for use in the United States and Canada, and CE approval for use in Europe and other countries.

Copyright © 2014-2015 ACKme Networks. http://ack.me

2 Block Diagram

The block diagram of the AMW004 module shows the main components of the module: an ARM Cortex-M4 microprocessor and BCM43362 Wi-Fi System-in-Package (SiP) module. The microprocessor and peripherals are driven by a 12MHz crystal. The integrated RTC is driven by a 32.768 kHz crystal. An integrated 1 MByte serial flash chip may be used to store additional applications, user data or firmware images as part of an over the air (OTA) update process.

The WLAN subsystem is controlled by WiConnect enabling the module to achieve minimum power consumption when the Wi-Fi networking interface is not required.

The module includes an antenna diversity switch. The switch enables static or dynamic selection of the on-board antenna or an external antenna plugged to the u.FL connector.

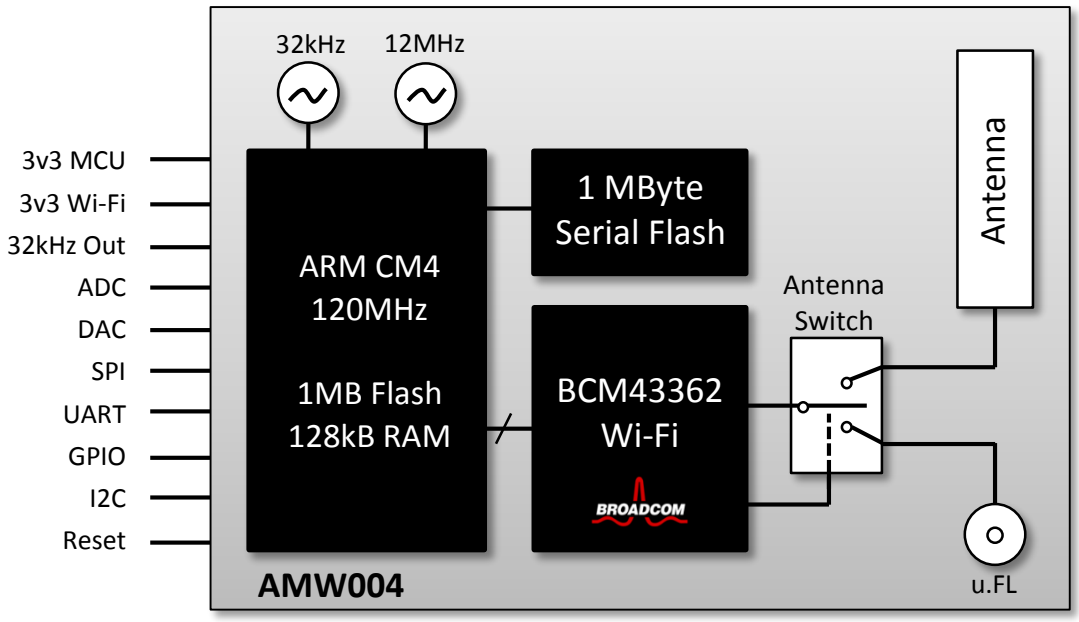

Copyright © 2014-2015 ACKme Networks. http://ack.me

3 Electrical Specifications

3.1 Absolute Maximum Ratings

CAUTION! The absolute maximum ratings in Table 1 and Table 2 indicate levels where permanent damage to the device can occur, even if these limits are exceeded for only a brief duration. Functional operation is not guaranteed under these conditions. Operation at absolute maximum conditions for extended periods can adversely affect long-term reliability of the device.

The values in Table 1 reflect absolute maximum ratings from the respective MCU and BCM43362 datasheets.

Table 1. Absolute Maximum Voltage Ratings

Symbol	Ratings	Min	Max	Unit
VDD_3V3	External power supply voltage to MCU subsystem	-0.3	4.0	V
VDD_3V3_WIFI	External power supply voltage to WLAN subsystem	-0.5	6.0	
V_{in}	Input voltage on any other MCU pin	-0.3	4.0	

Table 2. Absolute Maximum Environmental Ratings

Characteristic	Note	Min	Max	Unit
Storage Temperature	–	-40	+125	°C
Relative Humidity	Non-condensing	–	65	%

3.2 Recommended Operating Conditions

Functional operation is not guaranteed outside the limits shown in Table 3 and Table 4, and operation outside these limits for extended periods can adversely affect long-term reliability of the device.

3.2.1 DC Operating Conditions

Table 3. Recommended DC Operating Conditions

Symbol	Ratings	Min	Typ.	Max	Unit
VDD_3V3	External power supply voltage to MCU subsystem	1.62	3.3	3.6	V
VDD_3V3_WIFI	External power supply voltage to WLAN subsystem	2.3	3.3	3.6	

Note: VDD_3V3 and VDD_3V3_WIFI must be at the same voltage when using the Wi-Fi subsystem.

3.2.2 Environmental Conditions

Table 4. Recommended Environmental Conditions

Characteristic	Note	Min	Max	Unit
Ambient Temperature	Limited by WLAN chip specification	-30	+85	°C
Relative Humidity	Non-condensing	–	85	%

Copyright © 2014-2015 ACKme Networks. http://ack.me

3.3 Power Consumption

Table 5. Power consumption

Operational State	Note	Typical[1]	Max[1]	Max[1]	Unit
			T_A = 25°C	T_A = 85°C	
Backup	MCU Backup Mode, Wi-Fi powered off	1.85	1.85	12.42	µA
Wait[3]	MCU Wait Mode, Wi-Fi powered off	32.2	32.2	590	µA
Sleep	MCU Sleep Mode, Wi-Fi powered off	–	6.89	–	mA
Wi-Fi Powersave[2,3]	MCU Wait mode, Wi-Fi in powersave	0.77	–	–	mA
Active Receive	MCU Active Mode, Wi-Fi active receive	–	87.8	–	mA
Active Transmit[6]	MCU Active Mode, Wi-Fi active transmit	–	348.8	–	mA
UDP Receive[2,3,4]	MCU Wait mode, Wi-Fi in powersave mode	6.9	–	–	mA
UDP Transmit[2,3,5]	MCU Wait mode, Wi-Fi in powersave mode	12.5	–	–	mA

***Notes**:*

1. *Total combined current consumed by all power supplies: VDD_3V3, VDD_3V3_WIFI.*
2. *802.11 beacon Interval = 102.4ms, DTIM=3, Beacon Duration = 1ms @ 1Mbps.*
3. *MCU Wait Mode with 10µs wakeup latency*
4. *Average current receiving 1Mbit/s UDP at 802.11n MCS7*
5. *Average current transmitting 1Mbit/s UDP at 802.11n MCS7*
6. *Wi-Fi Transmitting at +18.5dBm CCK 11Mbit/s with 100% duty cycle, MCU Active mode with 128-bit flash-access.*

3.4 32kHz Crystal

Table 6. 32kHz Crystal Specifications (reproduced from manufacturer's datasheet)

Operational State	Note	Min	Typical	Max	Unit
Frequency		–	32768	–	Hz
Frequency Tolerance		–	20	–	ppm
Frequency Ageing	Measured @25°C ±3°C	-3	–	+3	ppm

Copyright © 2014-2015 ACKme Networks. http://ack.me

4 WLAN RF Specifications

The AMW004 WLAN radio specifications are derived from the Broadcom BCM43362 WLAN radio specifications.

Unless otherwise stated, the specifications in this section apply when the operating conditions are within the limits specified in Section 3.2, Recommended Operating Conditions. Functional operation outside these limits is not guaranteed.

All specifications are measured by connecting directly to the u.FL connector.

4.1 Summary WLAN Specifications

Table 7. Summary WLAN Specifications

Feature Supported	Description
WLAN Standard	IEEE 802.11b/g/n 1x1 SISO
Frequency Band	2.400 GHz – 2.484 GHz
WLAN Channels	Channels 1 – 14
Data Rates	802.11b (1, 2, 5.5, 11 Mbps) 802.11g (6, 9, 12, 24, 36, 48, 54 Mbps) 802.11n (6.5 - 65 Mbps / MCS0 - MCS7, HT20 with 800ns GI)
Maximum Receive level @ 2.4GHz	-2.5 dBm @ 1, 2 Mbps (8% PER, 1024 octets) -8.5 dBm @ 5.5, 11 Mbps (8% PER, 1024 Octets) -12 dBm @ 6-54 Mbps (10% PER, 1000 Octets)
Maximum RF Tx Output Power	+18.5 dBm @ 802.11b (EVM < -9 dB) +13.5 dBm @ 802.11n MCS7 (EVM < -28 dB)
Carrier Frequency Accuracy	±20 ppm (26 MHz crystal with ±10 ppm @ 25°C)

4.2 WLAN Receiver Specifications

Table 8. WLAN Receiver Performance Specifications

Parameter	Condition/Notes	Min	Typical	Max	Unit
Frequency Range	–	2400	–	2500	MHz
Operating Temperature[1]	–	-30	–	+85	°C
Receive Sensitivity[2] (8% PER for 1024 octet PSDU) at u.FL connector	1 Mbps DSSS	–	-94	-91	dBm
	11 Mbps CCK	–	-87	-83	
Receive Sensitivity[2] (10% PER for 1000 octet PSDU) at u.FL connector[1]	6 Mbps OFDM	–	-86	-81	dBm
	54 Mbps OFDM	–	-73	-69	

Copyright © 2014-2015 ACKme Networks. http://ack.me

Parameter	Condition/Notes	Min	Typical	Max	Unit
Receive Sensitivity[2] (10% PER for 4096 octet PSDU) at u.FL connector. Defined for default parameters: GF, 800ns GI, and non-STBC	65 Mbps MCS0, HT20	–	-86	-81	dBm
	65 Mbps MCS7, HT20	–	-70	-65	
Max. Receive Level @ 2.4GHz	@ 1, 2 Mbps (8% PER, 1024 octets)	-2	–	–	dBm
	@ 5.5, 11 Mbps (8% PER, 1024 Octets)	-8	–	–	
	@ 6-54 Mbps (10% PER, 1000 Octets)	-11.5	–	–	

***Notes**:*

1. *Operation below -20°C and above +65°C with parameter derating per Note 2*
2. *Derate receive sensitivity by 1.5dB for operation between temperatures of -30°C to -20°C and 65°C to 85°C*

4.3 WLAN Transmitter Specifications

Table 9. WLAN Transmitter Performance Specifications

Parameter	Condition/Notes		Min	Typical	Max	Unit
Frequency Range	–		2400	–	2500	MHz
Operating Temperature[1]	–		-30	–	+85	°C
Transmit power[2] measured at u.FL connector for highest power level setting at 25°C, VDD-3V3_RF_IN=3.3V with spectral mask and EVM compliance	**EVM does NOT exceed :**					
	1 Mbps DSSS	-11 dB	+15.5	+17	+18.5	dBm
	11 Mbps CCK	-11 dB	+15.5	+17	+18.5	
	6 Mbps OFDM	-22 dB	+12.5	+14	+15.5	
	54 Mbps OFDM	-25 dB	+12.5	+14	+15.5	
	MCS0, HT20	-22 dB	+10.5	+12	+13.5	
	MCS7, HT20	-28 dB	+10.5	+12	+13.5	

***Notes**:*

1. *Operation below -20°C and above +65°C with parameter derating per Note 2*
2. *Derate transmit power by 1.5dB for operation between temperatures of -30°C to -20°C and 65°C to 85°C*

Copyright © 2014-2015 ACKme Networks. http://ack.me

5 Pinout and Signal Descriptions

5.1 Pinout

A top view of the AMW004 pinout is depicted in Figure 1. All dimensions are in thousands of an inch. A recommended footprint is provided in Section 6.1.

Figure 1. AMW004 Pinout (TOP View – Pins NOT visible from top!)

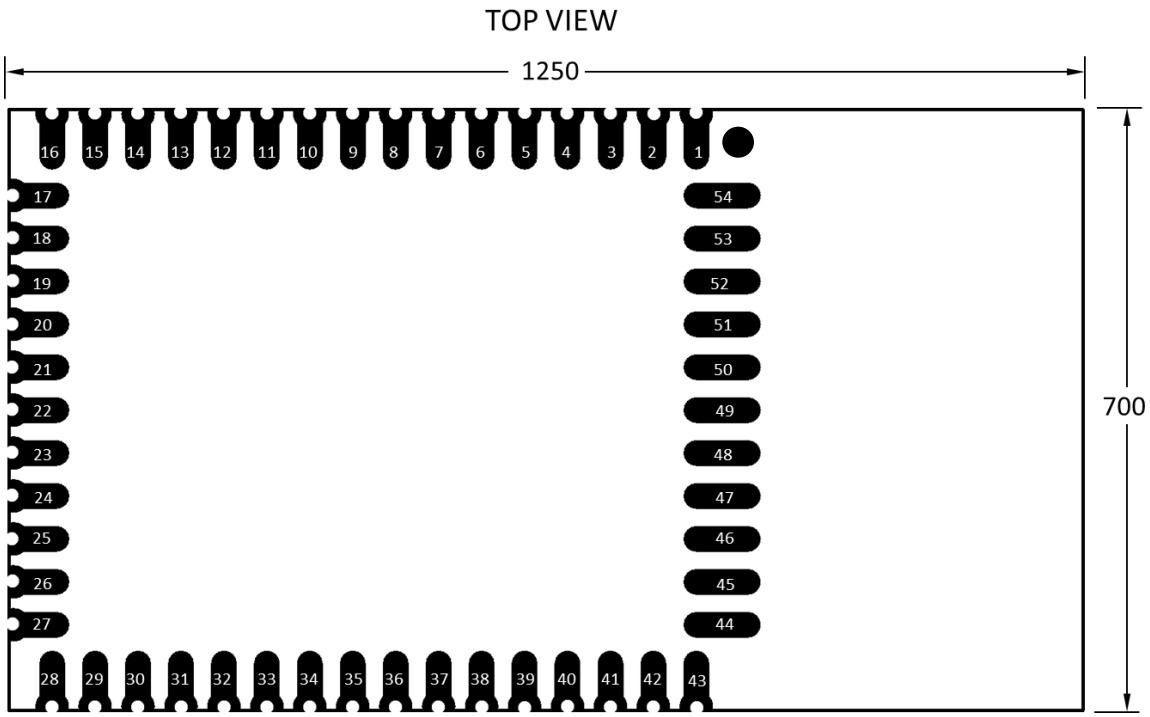

5.2 Pin Description

Table 10. AMW004 Pin Definitions

Pin	Name	Type[1]	Primary Function	Alternate & Other Function(s)
1	GND	S	Ground	-
2	VDD_3V3_WIFI	S	3.3V WLAN supply	-
3	NC1	NC	DO NOT CONNECT	-
4	NC2	NC	DO NOT CONNECT	-
5	NC3	NC	DO NOT CONNECT	-
6	NC4	NC	DO NOT CONNECT	-
7	GPIO_0	I/O	GPIO	PWM3, DAC0
8	GPIO_1	I/O	GPIO	-

Copyright © 2014-2015 ACKme Networks. http://ack.me

Pin	Name	Type[1]	Primary Function	Alternate & Other Function(s)
9	GPIO_2	I/O	GPIO	-
10	OSC_32K_OUT	O	OSC_32K_OUT	-
11	GPIO_3	I/O	GPIO	ADC4, WAKE
12	GPIO_4	I/O	GPIO	ADC5
13	GPIO_5	I/O	GPIO	PWM0, WAKE
14	GPIO_6	I/O	GPIO	PWM1, WAKE
15	GPIO_7	I/O	GPIO	PWM3, ADC0
16	GND	S	Ground	-
17	GPIO_8	I/O	GPIO	ADC1
18	GPIO_9	I/O	GPIO	PWM0, ADC2, WAKE
19	GPIO_10	I/O	GPIO	PWM3, WAKE
20	GPIO_11	I/O	GPIO	PWM2, WAKE
21	GPIO_12	I/O	GPIO	PWM1, ADC3, WAKE
22	GND	S	Ground	-
23	GPIO_13	I/O	UART1_RX	GPIO, ADC6
24	GPIO_14	I/O	UART1_TX	GPIO , ADC7
25	NC5	NC	DO NOT CONNECT	-
26	GPIO_15	I/O	UART1_RTS	GPIO, PWM1
27	GPIO_16	I/O	UART1_CTS	GPIO, PWM2
28	GND	S	Ground	-
29	VDD_3V3	S	3.3V MCU supply	-
30	GPIO_17	I/O	SPI_CLK[3]	WAKE. Not available as digital I/O
31	GPIO_18	O	SPI_MOSI[3]	Not available as digital I/O
32	GPIO_19	I	SPI_MISO[3]	Not available as digital I/O
33	GPIO_20	I/O	GPIO	PWM0, WAKE
34	GPIO_21	I/O	GPIO	PWM0, ADC8
35	GPIO_22	I/O	GPIO	ADC9
36	GPIO_23	I/O	GPIO	-
37	GPIO_24	I/O	GPIO	WAKE
38	GPIO_25	I/O	GPIO	UART0_TX
39	GPIO_26	I/O	GPIO	UART0_RX, WAKE

Copyright © 2014-2015 ACKme Networks. http://ack.me

Pin	Name	Type[1]	Primary Function	Alternate & Other Function(s)
40	RESET_N[2]	I	System Reset	-
41	GPIO_27	I/O	GPIO	I2C_SCL, WAKE
42	GPIO_28	I/O	GPIO	I2C_SDA
43-54	GND	S	Ground	-

Notes:

1. *I = Input, O = Output, S = Supply, NC = No connect*
2. *The AMW004 RESET_N pin is connected directly to the MCU NRST pin. When the MCU is placed in low-power BACKUP mode, the NRST pin is disabled and RESET_N can NOT be used to reset the module. To enable reset when MCU BACKUP mode is used, the RESET_N pin must be connected to one of the WAKE pins, and the WAKE pin must be enabled via software.*
3. *Connected to SPI serial flash inside module*

Copyright © 2014-2015 ACKme Networks. http://ack.me

6 Design Guidelines

6.1 Recommended PCB Footprint

Figure 2. AMW004 Recommended Footprint (Top view, all dimensions in thousands of an inch)

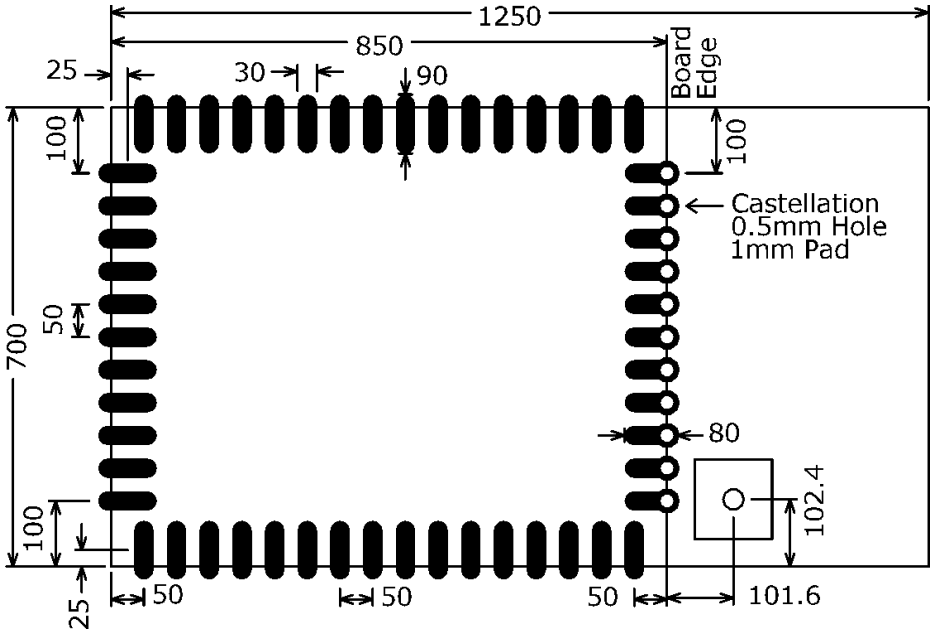

Figure 2 shows the recommended PCB footprint for the AMW004 module. All dimensions are in thousands of an inch.

The physical location of the u.FL antenna connector in the bottom-right corner of the picture is provided for reference ONLY. The connector is located on the top-side of the module and does not connect to the PCB.

The addition of castellation's on the periphery of the module carrier board directly beneath the end of the module nearest the antenna (as depicted in Figure 3) are strongly recommended.

6.2 Routing Recommendations

When designing a carrier board, the addition of ground fill directly underneath the AMW004 module, rather than signal or power traces, is recommended.

All ground pads adjacent to antenna pins must be connected to a solid ground plane. Do not route ANY metal or PCB traces underneath the printed PCB antenna!

For optimal range, provide a clearance of approximately 4-5 mm (0.2") above, below and to the front and each side of the antenna end of the module. The antenna has been explicitly tuned with the expectation it will be positioned within close proximity of a plastic enclosure or printed circuit board.

Failure to comply with these recommendations will almost certainly result in degraded performance of the radio receiver and/or transmitter.

Copyright © 2014-2015 ACKme Networks. http://ack.me

6.3 Soldering Information

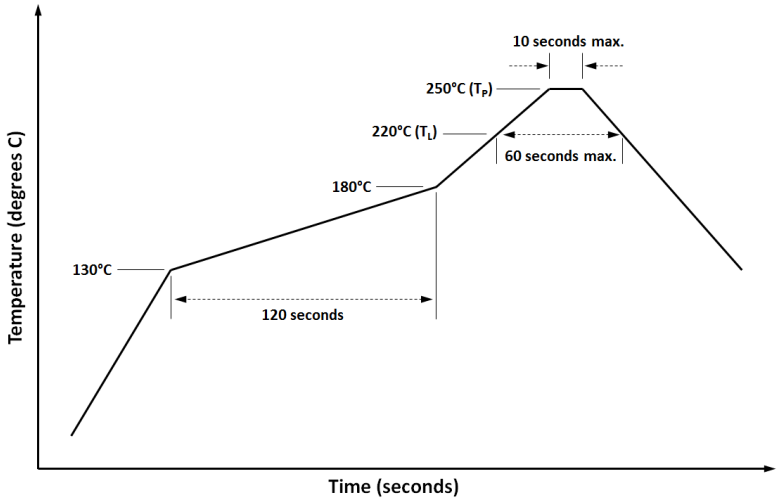

Figure 3 - Recommended solder reflow profile

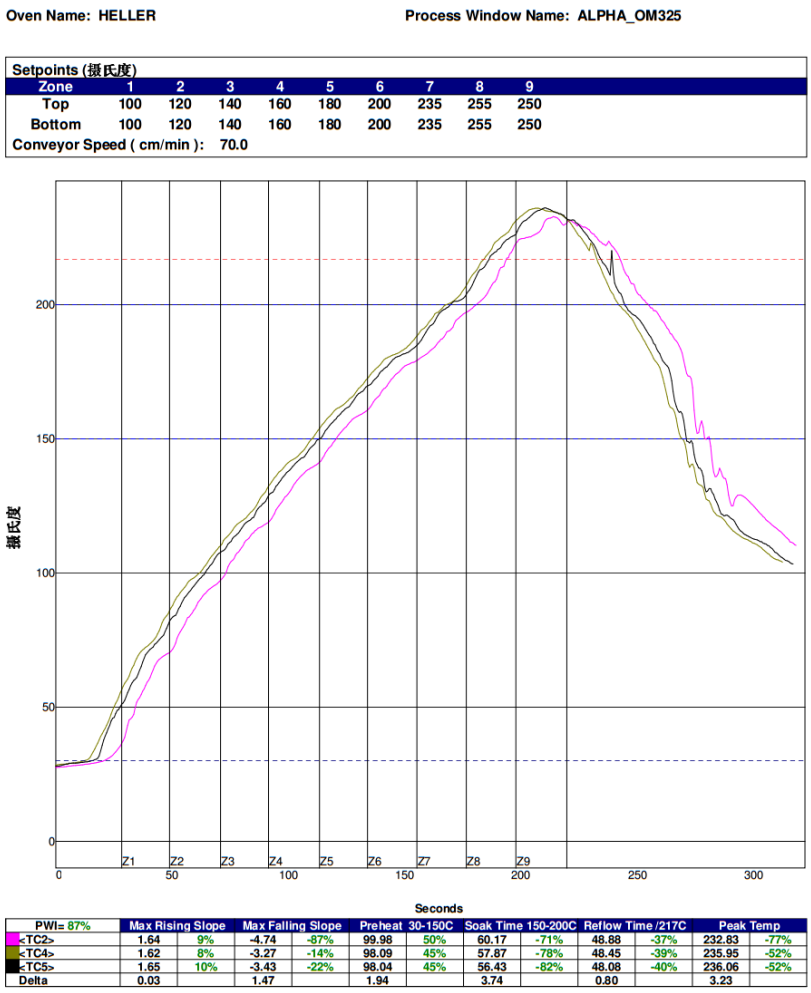

Figure 4 - Example solder reflow profile (AMW004-E03 evaluation board)

Copyright © 2014-2015 ACKme Networks. http://ack.me

6.4 Module Photograph

Figure 5. AMW004 Photograph (Top)

6.5 Antenna Radiation Pattern

The antenna radiation pattern of the AMW004 on-board PCB antenna shown in Figure 6 was measured with an AMW004 module mounted on an AMW004-E01 evaluation board. For each (0°, 180°) pair of X, Y, Z plots, the axis is perpendicular to the page. The orientation of the module is shown for reference on the 0° Y-axis plot. The maximum antenna gain is 3.18 dBi.

Figure 6. Antenna radiation pattern of the on-board antenna

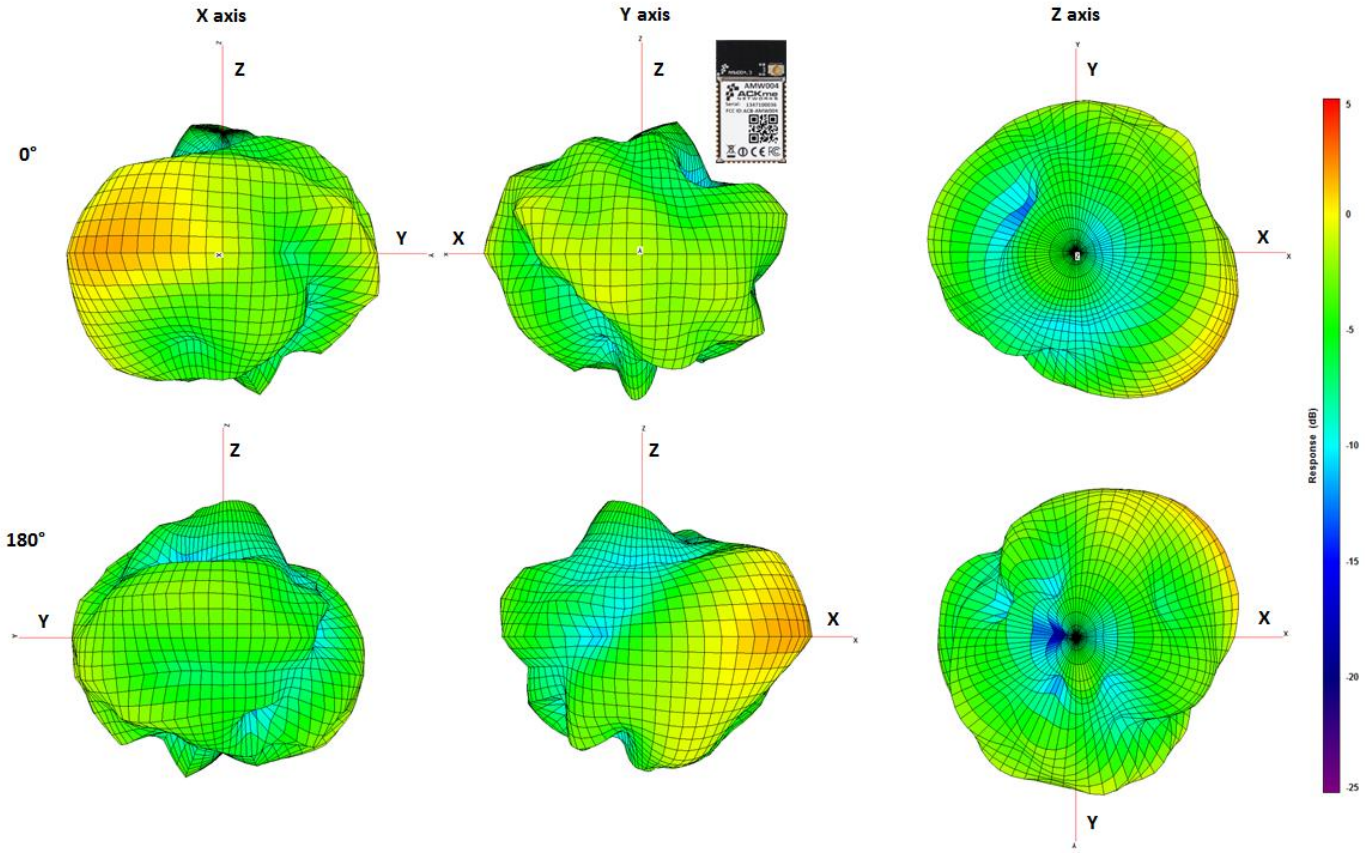

Copyright © 2014-2015 ACKme Networks. http://ack.me

6.6 External Antennas

The AMW004 module supports an external antenna. The monopole antennas listed in Table 1 have been certified for use with the AMW004 when connected to the u.FL antenna port via a 50 ohm miniature coax cable.

Further information about both antennas, pictured in Figure 7 and Figure 8, is available online at http://ack.me.

Table 11 - Certified Antenna Types

Model	Type	Gain (dBi)
Printed antenna	PCB trace	3.2
ACA_1SSRPP_2400	Monopole	0.6
ACA_4HSRPP_2458	Monopole	1.0

Figure 7 - ACA-1SSRPP-2400

Figure 8 - ACA-4HSRPP-2458

NOTE: If the external antenna port is configured for use with software, the port must be terminated in 50 ohms. Failure to terminate the antenna port will result in degraded radio performance.

6.7 Application Examples

This section provides circuit examples demonstrating how to configure the module to meet various application requirements.

6.7.1 Power Supply

The module requires at least 10µF of bulk capacitance between VDD_3V3 pin 29 and ground and between VDD_3V3_WIFI pin 2 and ground. The WLAN radio performance may be significantly degraded if ground Pins 44-54 near the antenna are not connected to a solid ground.

The VDD_3V3 and VDD_3V3_WIFI power supply pins must be connected together as shown in Figure 9.

Figure 9. VDD 3V3 Power Supply

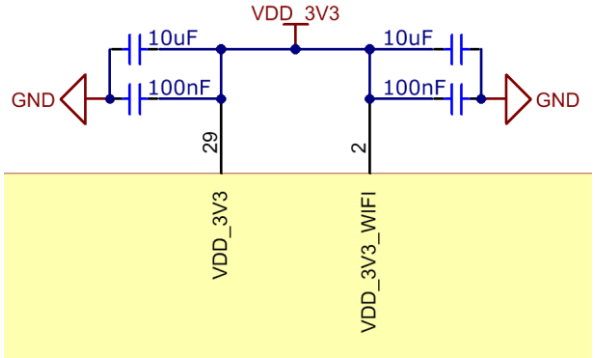

Copyright © 2014-2015 ACKme Networks. http://ack.me

6.7.2 Operation using WiConnect

Each AMW004 module is pre-installed with and licensed to use WiConnect, ACKme Networks feature-rich and reliable serial Wi-Fi networking application with easy-to-use commands.

The module only requires power and a connection to a UART serial interface. A host processor connects to pins 23/24 as shown in Figure 10 if the default UART1 serial interface is used. Use of the hardware flow control RTS/CTS pins is optional (but recommended) for baud rates below 1 Mbit/s. The default UART settings are 115200 8N1 (8 data bits, No parity and 1 stop bit).

Figure 10. Using the AMW004 Module with WiConnect and a UART serial interface

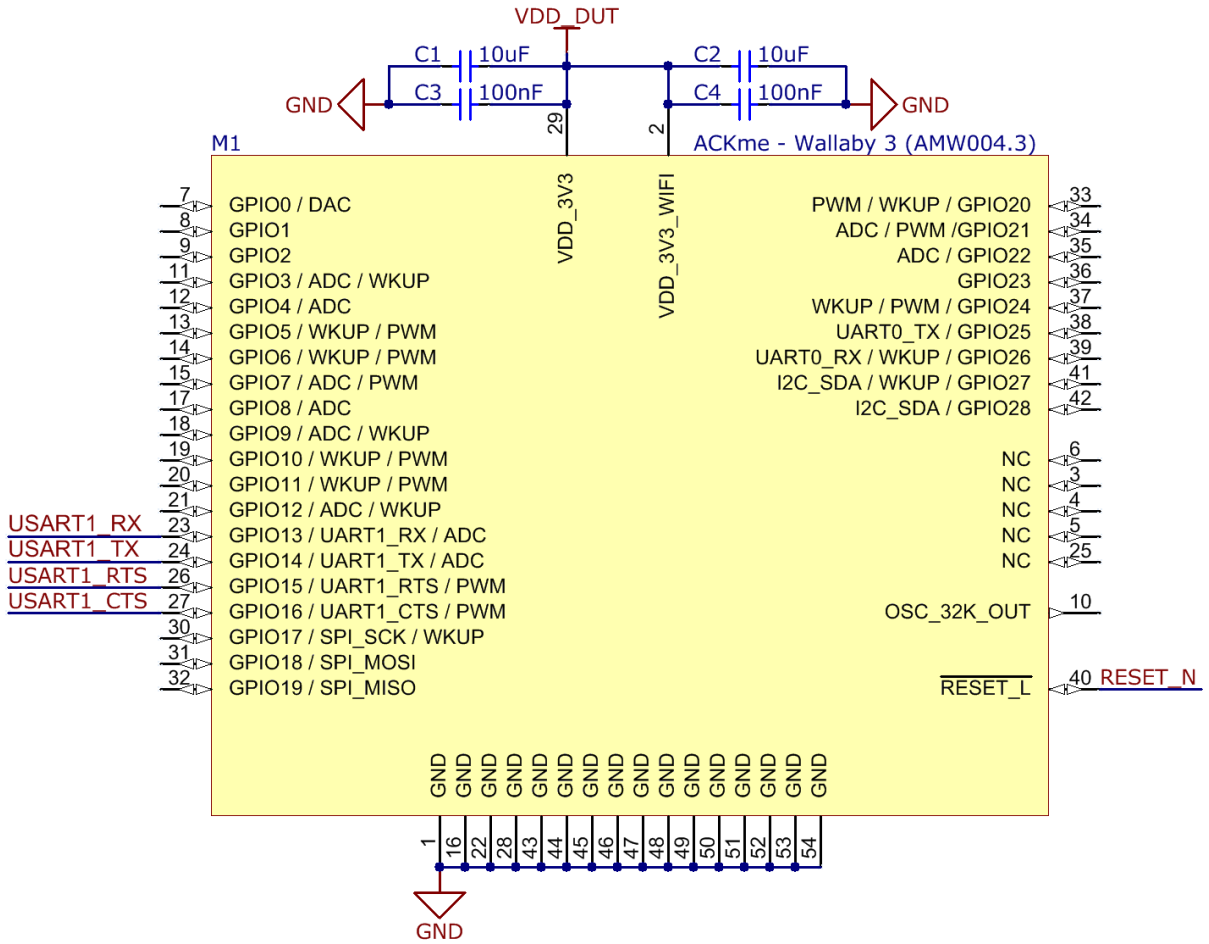

Copyright © 2014-2015 ACKme Networks. http://ack.me

7 Regulatory Certification

The AMW004 module has been certified for operation in various regulatory domains. This section outlines certification information specific to the following countries and regions:

- United States
- Canada
- Europe
- Australia
- New Zealand

Should you require regulatory certification for the AMW004 module in a country or region not listed, please contact your local ACKme Networks sales office or create a support request via our website at http://ack.me/contact.

7.1 United States

The ACKme Networks AMW004 module has received Federal Communications Commission (FCC) CFR47 Telecommunications, Part 15 Sub-part C "Intentional Radiators" modular approval in accordance with Part 15.212 Modular Transmitter approval. Modular approval allows the end user to integrate the AMW004 module into a finished product without obtaining subsequent and separate FCC approvals for intentional radiation, provided no changes or modifications are made to the module circuitry. Changes or modifications could void the user's authority to operate the equipment. The end user must comply with all of the instructions provided by the Grantee which indicate installation and/or operating conditions necessary for compliance.

The finished product is required to comply with all applicable FCC equipment authorization, regulations, requirements, and equipment functions not associated with the transmitter module portion. For example, compliance must be demonstrated to regulations for other transmitter components within the host product; to requirements for unintentional radiators (Part 15 Sub-part B "Unintentional Radiators"), such as digital devices, computer peripherals, radio receivers, etc.; and to additional authorization requirements for non-transmitter functions on the transmitter module (i.e. Verification, or Declaration of Conformity) (e.g., transmitter modules may also contain digital logic functions) as appropriate.

7.1.1 Labeling and User Information Requirements

The AMW004 module has been labelled with a unique FCC ID number, and if the FCC ID is not visible when the module is installed inside another device, then the outside of the finished product into which the module is installed must also display a label referring to the enclosed module. This exterior label can use wording as follows:

> Contains FCC ID: 2ABPY-61F8D
> This device complies with Part 15 of the FCC Rules. Operation is subject to the following two conditions: (1) this device may not cause harmful interference, and (2) this device must accept any interference received, including interference that may cause undesired operation.

The user manual for the product should include the following statement:

> This equipment has been tested and found to comply with the limits for a Class B digital device, pursuant to part 15 of the FCC Rules. These limits are designed to provide reasonable protection against harmful interference in a residential installation. This equipment generates, uses and can radiate radio frequency energy and if not installed and used in accordance with the instructions, may cause harmful interference to radio communications. However, there is no guarantee that interference will not occur in a particular installation. If this equipment does cause harmful interference to radio or television reception, which can be determined by turning the equipment off and on, the user is encouraged to try to correct the interference by one or more of the following measures:
> - Reorient or relocate the receiving antenna.
> - Increase the separation between the equipment and receiver.
> - Connect the equipment into an outlet on a circuit different from that to which the receiver is connected.
> - Consult the dealer or an experienced radio/TV technician for help.

Copyright © 2014-2015 ACKme Networks. http://ack.me

Additional information on labeling and user information requirements for Part 15 devices can be found in KDB Publication 784748 available at the FCC Office of Engineering and Technology (OET) Laboratory Division Knowledge Database (KDB) at the following website: https://apps.fcc.gov/oetcf/kdb/index.cfm

7.1.2 RF Exposure

All transmitters regulated by FCC must comply with RF exposure requirements. OET Bulletin 65, Evaluating Compliance with FCC Guidelines for Human Exposure to Radio Frequency Electromagnetic Fields, provides assistance in determining whether proposed or existing transmitting facilities, operations or devices comply with limits for human exposure to Radio Frequency (RF) fields adopted by the Federal Communications Commission (FCC). The bulletin offers guidelines and suggestions for evaluating compliance.

If appropriate, compliance with exposure guidelines for mobile and unlicensed devices can be accomplished by the use of warning labels and by providing users with information concerning minimum separation distances from transmitting structures and proper installation of antennas.

The following statement must be included as a CAUTION statement in manuals and OEM products to alert users of FCC RF exposure compliance:

> To satisfy FCC RF Exposure requirements for mobile and base station transmission devices, a separation distance of 20 cm or more should be maintained between the antenna of this device and persons during operation. To ensure compliance, operation at closer than this distance is not recommended. The antenna(s) used for this transmitter must not be co-located or operating in conjunction with any other antenna or transmitter

If the AMW004 module is used in a portable application (i.e., the antenna is less than 20 cm from persons during operation), the integrator is responsible for performing Specific Absorption Rate (SAR) testing in accordance with FCC rules 2.1091.

7.1.3 Approved Antenna Types

Modular approval testing of the AMW004 was performed with the antenna types listed in Table 11 - Certified Antenna Types.

To maintain modular approval in the United States, only the tested antenna types shall be used. It is permissible to use different antenna manufacturers provided the antenna types match: in-band and out-of-band radiation patterns and the antenna gain must be similar to those tested.

7.1.4 Further Information

Additional information regarding FCC certification and use of the AMW004 module in the United States is available from the following sources.

- Federal Communications Commission (FCC) http://www.fcc.gov.au
- FCC Office of Engineering and Technology (OET) Laboratory Division Knowledge Database (KDB) http://apps.fcc.gov/oetcf/kdb/index.cfm

7.2 Canada

The AMW004 module has been certified for use in Canada under Industry Canada (IC) Radio Standards Specification (RSS) RSS-210 and RSSGen. Modular approval permits the installation of a module in a host device without the need to recertify the device.

7.2.1 Labeling and User Information Requirements

Labeling Requirements for the Host Device (from Section 3.2.1, RSS-Gen, Issue 3, December 2010): The host device shall be properly labeled to identify the module within the host device.

The Industry Canada certification label of a module shall be clearly visible at all times when installed in the host device, otherwise the host device must be labeled to display the Industry Canada certification number of the module, preceded by the words “Contains transmitter module”, or the word “Contains”, or similar wording expressing the same meaning, as follows:

> Contains transmitter module IC: 11685A-61F8D

Copyright © 2014-2015 ACKme Networks. http://ack.me

User Manual Notice for License-Exempt Radio Apparatus (from Section 7.1.3 RSS-Gen, Issue 3, December 2010): User manuals for license-exempt radio apparatus shall contain the following or equivalent notice in a conspicuous location in the user manual or alternatively on the device or both:

> This device complies with Industry Canada license-exempt RSS standard(s). Operation is subject to the following two conditions: (1) this device may not cause interference, and (2) this device must accept any interference, including interference that may cause undesired operation of the device.
>
> Le présent appareil est conforme aux CNR d'Industrie Canada applicables aux appareils radio exempts de licence. L'exploitation est autorisée aux deux onditions suivantes: (1) l'appareil ne doit pas produire de brouillage, et (2) l'utilisateur de l'appareil doit accepter tout brouillage radioélectrique subi, meme si le brouillage est susceptible d'en compromettre le fonctionnement.

Transmitter Antenna Notification (from Section 7.1.2 RSS-Gen, Issue 3, December 2010): User manuals for transmitters shall display the following notice in a conspicuous location:

> Under Industry Canada regulations, this radio transmitter may only operate using an antenna of a type and maximum (or lesser) gain approved for the transmitter by Industry Canada. To reduce potential radio interference to other users, the antenna type and its gain should be so chosen that the equivalent isotropically radiated power (EIRP) is not more than that necessary for successful communication.
>
> Conformément à la réglementation d'Industrie Canada, le présent émetteur radio peut fonctionner avec une antenne d'un type et d'un gain maximal (ou inférieur) approuvé pour l'émetteur par Industrie Canada. Dans le but de réduire les risques de brouil-lage radioélectrique à l'intention des autres utilisa-teurs, il faut choisir le type d'antenne et son gain de sorte que la puissance isotrope rayonnée équivalente (p.i.r.e.) ne dépasse pas l'intensité nécessaire à l'établissement d'une communication satisfaisante.

The above notice may be affixed to the device instead of displayed in the user manual.

User manuals for transmitters equipped with detachable antennas shall also contain the following notice in a conspicuous location:

Copyright © 2014-2015 ACKme Networks. http://ack.me

This radio transmitter (identify the device by certification number, or model number if Category II) has been approved by Industry Canada to operate with the antenna types listed below with the maximum permissible gain and required antenna impedance for each antenna type indicated. Antenna types not included in this list, having a gain greater than the maximum gain indicated for that type, are strictly prohibited for use with this device.

Le présent émetteur radio (identifier le dispositif par son numéro de certification ou son numéro de modèle s'il fait partie du matériel de catégorie I) a été approuvé par Industrie Canada pour fonctionner avec les types d'antenne énumérés ci-dessous et ayant un gain admissible maximal et l'impédance requise pour chaque type d'antenne. Les types d'antenne non inclus dans cette liste, ou dont le gain est supérieur au gain maximal indiqué, sont strictement interdits pour l'exploitation de l'émetteur.

Immediately following the above notice, the manufacturer shall provide a list of all antenna types approved for use with the transmitter, indicating the maximum permissible antenna gain (in dBi) and required impedance for each.

7.2.2 Approved Antenna Types

Modular approval testing of the AMW004 was performed with the antenna types listed in Table 11 - Certified Antenna Types.

Transmitter Antenna (from Section 7.1.2 RSS-Gen, Issue 3, December 2010):

The AMW004 module can only be sold or operated with antennas with which it was approved. Transmitter may be approved with multiple antenna types. An antenna type comprises antennas having similar in-band and out-of-band radiation patterns. Testing shall be performed using the highest gain antenna of each combination of transmitter and antenna type for which approval is being sought, with the transmitter output power set at the maximum level. Any antenna of the same type having equal or lesser gain as an antenna that had been successfully tested with the transmitter, will also be considered approved with the transmitter, and may be used and marketed with the transmitter.

When a measurement at the antenna connector is used to determine RF output power, the effective gain of the device's antenna shall be stated, based on measurement or on data from the antenna manufacturer.

For transmitters of output power greater than 10 milliwatts, the total antenna gain shall be added to the measured RF output power to demonstrate compliance to the specified radiated power limits.

7.2.3 Further Information

Additional information may be obtained from the Industry Canada website at http://www.ic.gc.ca

7.3 Europe

The AMW004 module is an R&TTE Directive assessed radio module that is CE marked and has been manufactured and tested with the intention of being integrated into a final product.

The AMW004 module has been tested to R&TTE Directive 1999/5/EC Essential Requirements for Health and Safety Article 3.1(a), Electromagnetic Compatibility (EMC) Article 3.1(b), and Radio Article 3.2 and the results are summarized in Table 12. European Compliance Testing. A Notified Body Opinion has also been issued. All AMW004 test reports are available on the ACKme Networks website at http://ack.me/contact.

The R&TTE Compliance Association provides guidance on modular devices in the document titled Technical Guidance Note 01 available on the website at http://www.rtteca.com/html/download_area.htm.

NOTE: To maintain conformance to the testing listed in Table 12. , the module shall be installed in accordance with the installation instructions in this data sheet and shall not be modified.

When integrating a radio module into a completed product the integrator becomes the manufacturer of the final product and is therefore responsible for demonstrating compliance of the final product with the essential requirements of the R&TTE Directive.

Copyright © 2014-2015 ACKme Networks. http://ack.me

7.3.1 Labeling and User Information Requirements

The label on the final product which contains the AMW004 module must follow CE marking requirements. The R&TTE Compliance Association Technical Guidance Note 01 provides guidance on final product CE marking

7.3.1 External Antenna Requirements

From R&TTE Compliance Association document Technical Guidance Note 01:

Provided the integrator installing an assessed radio module with an integral or specific antenna and installed in conformance with the radio module manufacturer's installation instructions requires no further evaluation under Article 3.2 of the R&TTE Directive and does not require further involvement of an R&TTE Directive Notified Body for the final product. [Section 2.2.4]

The European Compliance Testing listed in Table 12 was performed using the antenna types listed in Table 11 - Certified Antenna Types.

7.3.2 Further Information

A document that can be used as a starting point in understanding the use of Short Range Devices (SRD) in Europe is the European Radio Communications Committee (ERC) Recommendation 70-03 E, which can be downloaded from the European Radio Communications Office (ERO) at: http://www.ero.dk.

Further information may be obtained from the following websites:

- Radio and Telecommunications Terminal Equipment (R&TTE)
  http://ec.europa.eu/enterprise/rtte/index_en.htm
- European Conference of Postal and Telecommunications Administrations (CEPT)
  http://www.cept.org
- European Telecommunications Standards Institute (ETSI)
  http://www.etsi.org
- European Radio Communications Office (ERO)
  http://www.ero.dk
- The Radio and Telecommunications Terminal Equipment Compliance Association (R&TTE CA)
  http://www.rtteca.com/

Table 12. European Compliance Testing

Certification	Standard	Report Number	Date	Laboratory
Safety	EN 60950-1:2006+A11:2009+A1:2010, A12:2011, A2:2013	W6M21401-13800-L	May 6, 2014	Worldwide Testing Services (Taiwan) Co., Ltd.
Health	EN 62311:2008	EA533175	May 1, 2015	Sporton International Inc. (Taiwan)
EMC	EN 301 489-1 v1.9.2 (2011-09), Class B EN301 489-17 v2.2.1 (2012-09) EN55022:2010/AC:2011, Class B EN 55024:2010	EH533175	Apr 10, 2015	
Radio	EN 300 328 v1.9.1 (2015-02)	ER533175	May 1, 2015	
Notified Body Opinion	CE1177	TCF-972TC15	May 19, 2015	TIMCO Engineering, Inc.

Copyright © 2014-2015 ACKme Networks. http://ack.me

7.4 Australia

Australian radio regulations do not provide a modular approval policy similar to the United States (FCC) and Canada (IC). However, AMW004 module test reports may be used in part to demonstrate compliance in accordance with ACMA Radio communications "Short Range Devices" Standard 2004 which references Australia/New Zealand industry standard AS/NZS-4268:2012. AMW004 RF transmitter test reports may be used as part of the product certification and compliance folder. For further information regarding the availability of RF test reports, please contact ACKme Networks via our website at http://ack.me/contact.

7.4.1 External Antenna Requirements

Compliance tests were performed using antenna types listed in Table 11 - Certified Antenna Types.

If an external antenna is used with the AMW004 module, additional testing of the end product is needed to meet Australian regulatory requirements.

7.4.2 Further Information

Additional information may be obtained from the Australian Communications and Media Authority website at http://www.acma.gov.au.

7.5 New Zealand

New Zealand radio regulations do not provide a modular approval policy similar to the United States (FCC) and Canada (IC). However, AMW004 module test reports may be used in part to demonstrate compliance with the New Zealand "General User Radio License for Short Range Devices". New Zealand Radio communications (Radio Standards) Notice 2010 references Australia/New Zealand industry standard AS/NZS-4268:2012. AMW004 RF transmitter test reports may be used as part of the product certification and compliance folder. For further information regarding the availability of RF test reports, please contact ACKme Networks via our website at http://ack.me/contact.

7.5.1 External Antenna Requirements

Compliance tests were performed using antenna types listed in Table 11 - Certified Antenna Types.

If an external antenna is used with the AMW004 module, additional testing of the end product is needed to meet New Zealand regulatory requirements.

7.5.2 Further Information

Additional information may be obtained from the New Zealand Radio Spectrum Ministry of Economic Development website at http://www.rsm.govt.nz.

Copyright © 2014-2015 ACKme Networks. http://ack.me

8 Packaging, Handling & Storage, RoHS

8.1 Packaging

The tray packaging of 21 AMW004 modules is shipped in a moisture resistant sealed bag as shown in Figure 11. The shelf life of the sealed bag is 12 months at 40°C and <90% Relative Humidity (RH). Please refer to the bag seal date.

Figure 11. MSL3 Packaging

8.2 Handling & Storage

CAUTION
MSL3 Sensitive Device!

The AMW004 module is a moisture sensitive device rated at Moisture Sensitive Level 3 (MSL3) per **IPC/JEDEC J-STD-20**.

After opening the moisture sealed storage bag, modules that will be subjected to reflow solder or other high temperature processes must be:

1. mounted to a circuit board within 168 hours at factory conditions (≤30°C and <60% RH)

   OR

2. continuously stored per **IPC/JEDEC J-STD-033**

Modules that have been exposed to moisture and environmental conditions exceeding packaging and storage conditions MUST be baked before mounting according to **IPC/JEDEC J-STD-033**.

Failure to meet packaging and storage conditions will result in irreparable damage to modules during solder reflow.

8.3 RoHS Directive

The AMW004 module is produced according to the RoHS (Restriction of the use of certain Hazardous Substances in electrical and electronic equipment) directive and complies with the directive.

Copyright © 2014-2015 ACKme Networks. http://ack.me

9 Ordering Information

The AMW004 module is available individually or in a bulk tray of 21 units as described in Table 13.

Table 13. Ordering Information

Part Number	Description
AMW004/S	1 x AMW004 module with WiConnect pre-installed. Each module is individually packaged in an ESD bag.
AMW004/T	A single tray containing 21 x AMW004 modules, each with WiConnect pre-installed. The entire tray is packaged in an ESD and MSL3-rated moisture sensitive bag.

Copyright © 2014-2015 ACKme Networks. http://ack.me

10 Revision History & Glossary

10.1 Revision History

Table 14: Document Revision History

Revision	Date	Change Description
ADS-MW004-100R	Apr 15, 2014	Initial release
ADS-MW004-101R	Apr 28, 2014	Added solder reflow profile; updated throughput & data rate specs
ADS-MW004-102R	Dec 2, 2014	Added antenna certification details, revised for WiConnect
ADS-MW004-103R	May 6, 2015	Updated ADC and PWM details, updated Table 12, European Compliance Testing
ADS-MW004-104R	Sep 9, 2015	Updated packaging information, updated Table 12, European Compliance Testing

10.2 Glossary

In most cases, acronyms and abbreviations are defined on first use. A comprehensive list of acronyms and other terms used in ACKme Networks documents are provided on the ACKme Networks website at http://ack.me/FAQs/Glossary.

Copyright © 2014-2015 ACKme Networks. http://ack.me

11 References

Throughout this data sheet, references to other documents are listed. The following documents provide additional material:

1. IEEE 802.11 Standard – 2012
   Institute of Electrical and Electronics Engineers.
   http://standards.ieee.org

Copyright © 2014-2015 ACKme Networks. http://ack.me

ACKme reserves the right to make changes without further notice to any products or data herein to improve reliability, function, or design. Information furnished by ACKme is believed to be accurate and reliable. However, ACKme does not assume any liability arising out of the application or use of this information, nor the application or use of any product described herein, neither does it convey any license under its patent rights nor the rights of others.

ACKme Networks
US Headquarters:
20 North Santa Cruz Ave
Los Gatos CA 95030

Contact Information
+1 408 402 8160
http://ack.me/contact

Copyright © 2014-2015 ACKme Networks

ADS-MW004-104R • Data Sheet
September 10, 2015